Wave Reflow Selective

See the Difference

Soldering is our Passion

Reflow Soldering System SEHO MAXIREFLOW

Excellent Reflow Soldering

MAXIREFLOW

- **Winner of the Global Technology Award.**
- **Worldwide unique:**
  thermally invisible conveyor system.
- **Maximum process reliability with 100 % parallel alignment of the conveyor rails.**
- **Efficient flux management ensures long maintenance intervals.**
- **Powerful heat transfer.**
- **Low, component-sensitive set temperatures.**
- **Flexible temperature management due to a high number of heating zones.**
- **Effective, multi-stage cooling zone.**
- **Low operation costs.**
- **MaxiReflow 3.0 available in three basic versions:**
  - with 7 heating zones
  - with 8 heating zones, designed for nitrogen operation
  - with 10 heating zones, designed for nitrogen operation
- **MaxiReflow 3.6 available in two basic versions:**
  - with 10 heating zones, designed for nitrogen operation
  - with 12 heating zones, designed for nitrogen operation

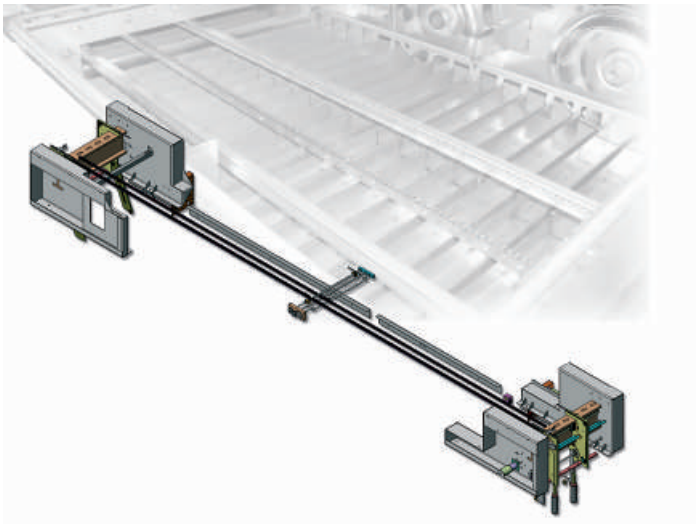

SEHO MaxiReflow:
Maximum Performance - Maximum Results

SEHO MaxiReflow, which won the Global Technology Award 2006, sets a milstone in soldering technology. The system is equipped with a revolutionary, thermally invisible conveyor system and a completely revised, high efficient flux management with process gas cleaning.

Maximum process reliability, maximum soldering quality and maximum machine availability arrive at one conclusion: SEHO MaxiReflow.

Maximum Parallelism: The LowMassConveyor

The new 'LowMassConveyor' transport system of the MaxiReflow has shown itself to be extremely innovative and unique worldwide.

The chain guide profiles are carried by continuous steel cables in this transport system, each of which is spanned with a tensile force of 14,700 newton through the entire system. This ensures an absolute parallel alignment of the profiles. Extremely slender chain guide profiles which are 'thermally invisible' can thus be utilized at the same time.

A similar principle is used for the center support, which cannot be 'seen' on the temperature profile either, completely independent from its position.

This innovative transport system has a further advantage for the area of maintenance.

Only one adjustment mechanism is still required within the process zone because the parallel alignment of the chain guide profiles is not achieved within the oven by means of spindles but solely by means of tensile force from the spanned cables.

This method results in less potentially corroding surfaces on which the contaminated process gases can condense, whereby the outlay on maintenance and the extent of possible wear are reduced to a minimum. This does not only save time but also money in your production.

Maximum Cleaning Results:
The Flux Management

The significantly increased temperatures of the lead-free process inevitably lead to more evaporation from paste, components, PCB, solder mask etc. as well as products of chemical reactions between them.

Therefore, an efficient flux management with cleaning of the process gas is an absolute must for a modern reflow soldering system.

The MaxiReflow is equipped with a new and highly efficient multi-stage process gas cleaning system which ensures long maintenance intervals. This guarantees a remarkable cost reduction in your production and additionally makes for a high machine availability.

A new feature is that all of the heated zones are directly connected to the system for cleaning the process gas. Moreover, the removed process gas is conducted within the hot area up to the cleaning point, in order to guarantee that the condensation is controlled. The cleaning system itself is the first cold point that the process gas - which has to be cleaned - meets: a thermally conditionable condensing cyclone.

Maximum Heat Transfer:
Perfect Temperature Management for Perfect Soldering Results

Provided with the unique tangential blower technology and a perfect gas leading system, the MaxiReflow systems exactly deliver what you expect from your reflow soldering machine:
excellent and repeatable soldering results.

A very homogeneous heat distribution throughout the entire conveyor width, combined with moderate gas velocities are ensured by a large volume of ventilated process gas and especially adapted slot nozzles. This gas leading concept completely excludes any shadowing or unintended movement of components.

	MaxiReflow 3.0 7 Zones	MaxiReflow 3.0 8 Zones	MaxiReflow 3.0 10 Zones	MaxiReflow 3.6 10 Zones	MaxiReflow 3.6 12 Zones
Length of heated area [mm]	3100	3100	3100	3700	3700
Length of heated area [inch]	122	122	122	145.6	145.6
Preheat zones top / bottom [pcs]	5 / 5	5 / 5	7 / 7	6 / 6	8 / 8
Peak zones top / bottom [pcs]	2 / 2	3 / 3	3 / 3	4 / 4	4 / 4
Length of cooling area [mm]	1050	900	900	1200	1200
Length of cooling area [inch]	41.3	35.4	35.4	47.2	47.2

The special shape of the nozzles and the optimized gas leading principle FDS (Flow Dynamic System) make for an ideal, highly efficient heat transfer to the printed circuit boards and thus enable the most effective and component-sensitive heating of the product with set temperatures on a low level. This helps a lot to fullfil today's requirements concerning the narrow process window of the lead-free soldering process. All the components will be soldered reliably whereas the temperature impact on the entire assembly and the Delta T will be reduced significantly.

Flexibility of the MaxiReflow systems is also given in terms of the temperature management. Depending on the application the machine may be equipped with different heating zone configurations. This enables a very precise and flexible reaction to all material- and process-related peculiarities - for perfect soldering results.

Maximum Flexibility: The Cooling Section

The modular, multi-stage cooling area of the MaxiReflow systems provides special flexibility.

The simplest set-up of the cooling zone is a blower cooling with ambient air.

The next step is a closed cooling module with integrated heat exchangers which is operated with water. The cooling water either may be factory-provided or can be supplied from an internal cooling water heat exchanger.

As another alternative the system may be equipped with cooling aggregates which are operated with refrigerant. The waste heat produced by the cooling aggregates can be transferred to the ambient air in the factory, i.e. to the exhaust or - in the most "elegant" version - to cooling water.

Depending on the application there are also cooling aggregates with cryogenic refrigerants available or the cooling aggregates can be positioned outside.

Maximum Process Reliability:
Traceability with Thermo Camera

Usually, the thermal influence on the assemblies during the reflow process is measured with a test board, prepared with thermo couples, which is run through the oven during set-up of a process. This way of process control delivers data at selected points of the assembly at the time when the measurement was taken. There is, however, no possibility to control the thermal impact on each produced assembly.

The thermographic camera, which may be installed at the end of the peak zone, offers the possibility of a touchless temperature measurement and delivers the actual thermal data of all assemblies passing through the oven.

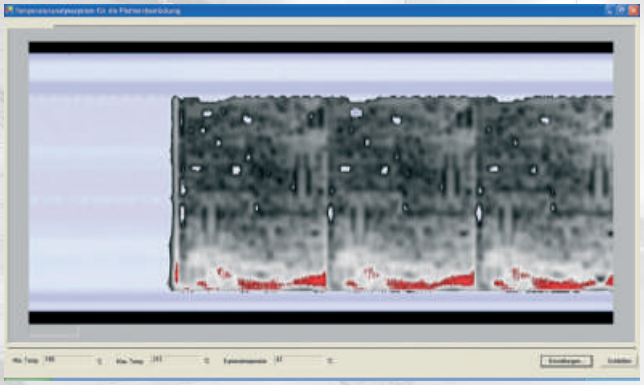

This provides full production control. Of course, the thermographic picture may be saved together with the data of the management data system which allows tracing of each assembly being produced.

The thermographic camera uses latest detector technology which scans extremely fast up to 256 lines per second and which is suitable for continuous operation.

The software offers the possibility to define minimum and maximum temperature limits for each product. Every manufactured board will be pictured as a grey-scaled thermography, accentuating excess temperature areas in red and insufficient temperature areas in blue colour. If the actually measured values should exceed or fall below the pre-defined tolerance values, a warning message will be initiated.

This unique system ensures 100 % process reliability in the up-to-date electronic production.

MAXIREFLOW

Maximum Supervision: The Control Unit

The modular control concept of the MaxiReflow is open-ended and consequently a system ready for new developments or additions and it constantly offers the opportunity to meet new challenges.

The software is easy to use and provided with a comprehensive management data tool for documentation and analyzing purposes.

As a standard, the control unit is provided with a long-distance diagnostics function via modem. Thus, our software and service engineers quickly and at any time may assist you optimize new soldering processes.

Technical Equipment

Heating Zones		
process gas		N_2 or air
MaxiReflow 3.0:	number of heating zones top and bottom [pcs]	7, 8 or 10
	total length of heated area [mm]	3150
	average working speed (lead-free)	0.7 - 1.0 m/min.
MaxiReflow 3.6:	number of heating zones top and bottom [pcs]	10 or 12
	total length of heated area [mm]	3750
	average working speed (lead-free)	0.8 - 1.2 m/min.
length of infeed tunnel [mm]		400
length of exit tunnel [mm]		150
time for heating up [min]		approx. 20
Conveyor System		
pin-chain conveyor - LowMassConveyor		○
combined conveyor (pin-chain and mesh belt)		○
max. working width [mm]		500
dual lane conveyor - LowMassConveyor		○
chain center support with programmable positioning		○
parking position for chain center support		●
programmable positioning of the conveyors		●
Cooling Area		
number of cooling zones [pcs]		2
MaxiReflow 3.0:	length of cooling area [mm]	900
MaxiReflow 3.6:	length of cooling area [mm]	1200
Flux Management		
3-stage flux management with process gas cleaning		●
Nitrogen Technology		
equipped for nitrogen operation (except MaxiReflow 3.0 / 7)		●
oxygen analyzer		○
oxygen analyzer with nitrogen saving control		○
average nitrogen consumption at 200 ppm residual O_2 [1)]		< 20 m³/h
nitrogen quality		5.0
pressure of nitrogen supply [bar]		6 - 8
Control Unit		
micro processor control with operation via PC		●
traceability thermographic camera		○
management data system according to ISO 9000		●
clock timer and interval functions		●
interfaces for inline integration (SMEMA, Siemens etc.)		○
closed loop control of all relevant functions		●
Machine Dimensions		
total length [mm]	MaxiReflow 3.0	5610
	MaxiReflow 3.6	6520
total width [mm]		1500
total height, depends on infeed height [mm]		1490 - 1590

Further options upon request. ● Standard ○ Option
[1)]depending on application

Headoffice Germany

SEHO Systems GmbH
Frankenstrasse 7 - 11
97892 Kreuzwertheim
Germany
Phone +49 (0) 93 42-889-0
Fax +49 (0) 93 42-889-200
Mail info@seho.de
Web www.seho.de

Americas

SEHO North America, Inc.
1420 Jamike Drive
Erlanger, KY 41018
USA
Phone +1-859-371-7346
Fax +1-859-282-6718
Mail sehona@sehona.com
Web www.sehona.com

England

SEHO UK Ltd.
Sterling House
501 Middleton Road
Chadderton
Oldham OL9 9LY
England
Phone +44-161-654-9117
Fax +44-161-654-7817
Mail info@sehouk.com
Web www.sehouk.com

www.seho.de